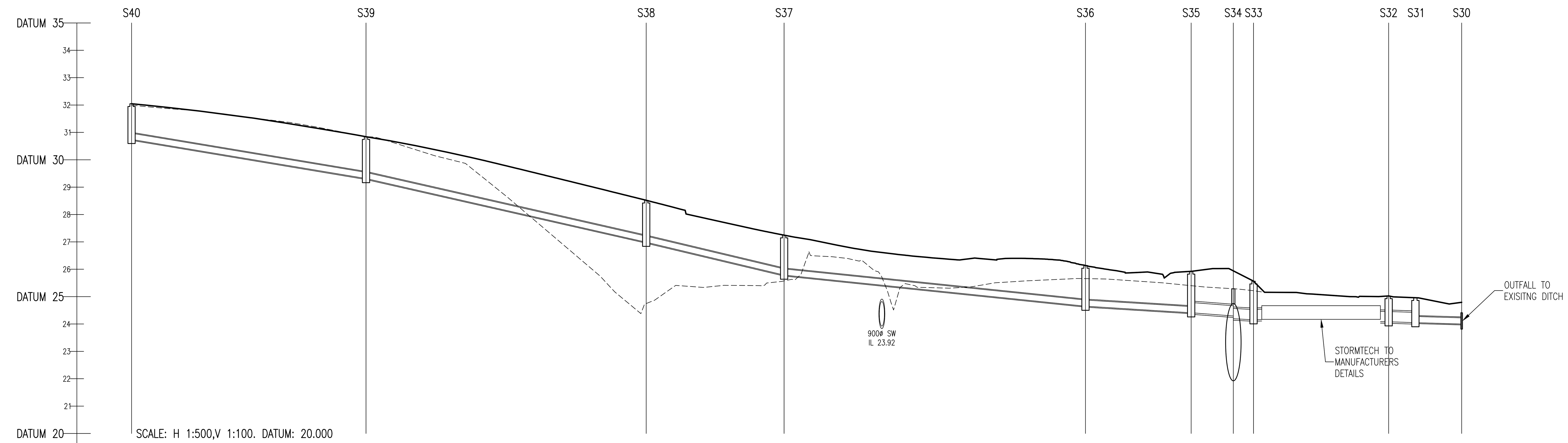

SCALE: H 1:500,V 1:100. DATUM: 20.000

	S40	S39	S38	S37	S36	S35	S34	S33		S32	S31	S30
COVER LEVEL	32.048	30.842	28.520	27.246	26.137	25.923	25.287	25.563	24.192 / 24.155 ; 24.080 / 24.050	25.025	24.959	24.410
INVERT LEVEL	30.744	29.314 29.314	26.987 26.987	25.787 25.787	24.650 24.650	24.410 24.410	24.292		24.155 / 24.165 ; 24.085 / 24.080		24.050	24.000
DEPTH (m)	1.304	1.528	1.533	1.459	1.487	1.513	NA	1.408		0.945	0.909	???

	S40–S39	S39–S38	S38–S37	S37–S36	S36–S35	S35–S34	S34–S33			S32–S31	S31–S30
DISTANCE (m)	42.84	51.21	25.20	55.07	19.32	7.70	3.70	1.50	1.50	4.89	8.46
PIPE SLOPE	1:30	1:22	1:21	1:48	1:80	1:65	1:100	-1:157	1:274	1:163	1:169
PIPE SIZE	225mm	225mm	225mm	225mm	225mm	375mm	375mm	375mm	375mm	375mm	225mm

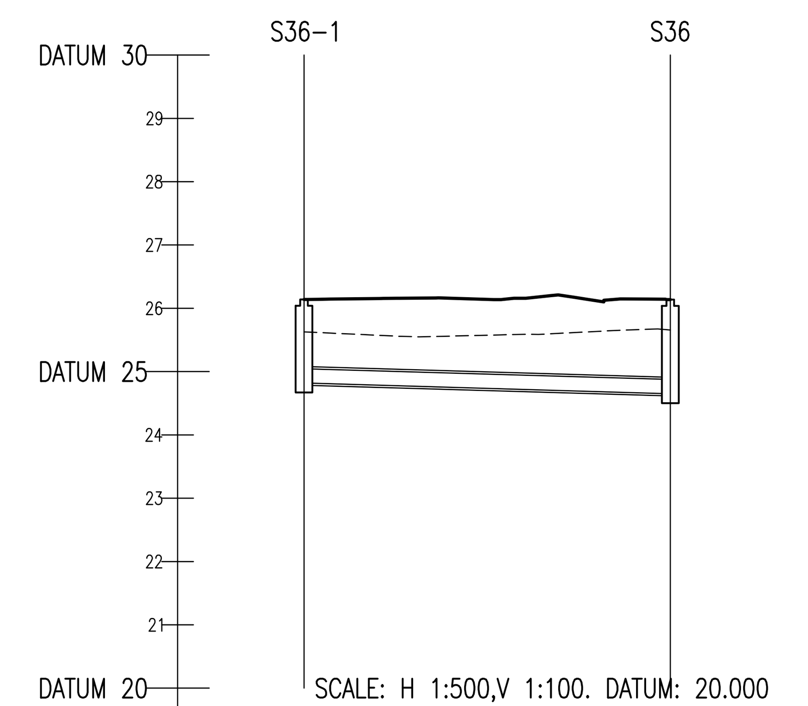

SCALE: H 1:500,V 1:100. DATUM: 20.000

	S36-1	S36
COVER LEVEL	26.140	26.137
INVERT LEVEL	24.820	24.650
DEPTH (m)	1.320	1.487
DISTANCE (m)	28.97	
PIPE SLOPE	1:170	
PIPE SIZE	225mm	

© COPYRIGHT OF THIS DRAWING IS RESERVED BY DBFL CONSULTING ENGINEERS. NO PART SHALL BE REPRODUCED OR TRANSMITTED WITHOUT THEIR WRITTEN PERMISSION.

ON ORIGINAL

0 5 10 15 20 25 30 40 50mm

NOTES:

1. ALL DRAWINGS TO BE CHECKED BY CONTRACTOR ON SITE AND ENGINEER INFORMED OF DISCREPANCIES BEFORE WORK COMMENCES
2. ALL LEVELS ARE IN METRES AND ARE RELATED TO ORDNANCE DATUM
3. CONTRACTOR SHALL SATISFY HIMSELF AS TO THE ACCURACY OF PAVEMENT LEVELS ON SITE PRIOR TO COMMENCEMENT OF WORKS ON SITE
4. ALL WORKS TO BE CONSTRUCTED IN ACCORDANCE WITH THE NRA SPECIFICATION FOR ROAD WORKS UNLESS NOTED OTHERWISE
5. THIS DRAWING IS FOR PLANNING PURPOSES ONLY
6. MANHOLE COVER LEVELS ARE TO CONFORM WITH FINISHED ROAD AND PATH LEVELS
7. WHERE COVER TO PIPE IS LESS THAN 1200mm (ROAD/PATH/VERGE) OR 900mm (OPEN SPACE) SURROUND PIPE IN MINIMUM 150mm CONCRETE

KEY

- - - - - EXISTING GROUND PROFILE
——— PROPOSED GROUND PROFILE

REV.	DATE	DESCRIPTION	BY	CHKD.
B	31-07-20	STAGE 3 NEW APPLICATION	DJG	DMW
A	10-03-20	STAGE 2 NEW APPLICATION	DJG	AOS

PLANNING SHD STAGE 3

DESIGNED	DMW	PREPARED	DJG
DATE	OCT 2019	CHECKED	DJR

DBFL Consulting Engineers
DUBLIN OFFICE Ormond House, Upper Ormond Quay, Dublin 7, Ireland. PHONE +353 1 400 4000 FAX +353 1 400 4050
WATERFORD OFFICE Unit 2, The Chandlery, 1-2 O' Connell Street, Waterford, Ireland. PHONE +353 51 309 500 FAX +353 51 844 913
EMAIL info@dbfl.ie SITE www.dbfl.ie

PROJECT
STRATEGIC HOUSING DEVELOPMENT AT COLPE WEST, DROGHEDA, CO. MEATH

DRG. TITLE
LONGITUDINAL SECTIONS THROUGH SURFACE WATER SHEET 9

CLIENT
SHANNON HOMES DROGHEDA LTD.

SCALE	AS SHOWN @A1	FILE REF.	170092-3081
DRG. NO.	170092-3089		B